# BVA02/A0630/03 Datasheet

## Product Name // Vertical Power Entry Module 67.5mm Top Fixing Flange Mount C14 Cold Condition Inlet Integral Single Fused (PF0011) 2.8mm Tab Termination A0630 Filter (6A PS21/A L/C v3) Red Indicator

View Product Page



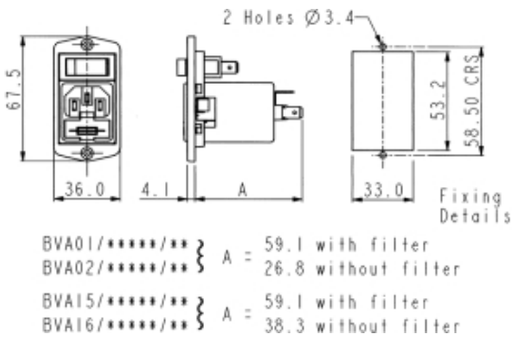


## // Product Description:

- Vertical Power Entry Module 67.5mm/81.5mm (part codes prefixed BVA) and 59mm/72.3mm (part codes prefixed BVB)
- Screw fix to panel via choice of fixing flanges, depending on part code:
- Part codes prefixed BVA: Top fixing flanges
- Part codes prefixed BVB: Side fixing flanges
- C14 Cold Condition Inlet with integral fuseholder(s) depending on part code:
- Part codes prefixed BVA01, BVB01, BVA02, BVB02: PF0011 Single Fused Inlet
- Part codes prefixed BVA15, BVB15, BVA16, BVB16: PF0033 Twin Fused Inlet
- Choice of Termination depending on part code:
- Part codes prefixed BVA01, BVB01, BVA15, BVB15: 6.3mm Tab
- Part codes prefixed BVA02, BVB02, BVA16, BVB16: 2.8mm Tab
- Choice of mains filter depending on part code:
- Part codes containing /Z0000 are unfiltered
- Choice of mains filter options (part codes containing codes starting /A)
- Choice of many other options as specified by individual part code, including indicators, illuminated switches, switch markings, etc

## // General Information:

| | |
|---|---|
| **Product Display Title:** | Vertical Power Entry Module 67.5mm/81.5mm (part codes prefixed BVA) and 59mm/72.3mm (part codes prefixed BVB) |
| **Product Family:** | IEC Connectors |
| **Product Series:** | Power Entry Modules |
| **Current Max:** | 6A |
| **Filter Type:** | 6A PS21/A L/C v3 |
| **Function:** | C14 Inlets |
| **Fuseholder Inlet Type:** | Integral Single Fused |
| **Iec Connector Components:** | None |
| **Iec Connector Mates With:** | PF0011 |
| **Iec Filter Options:** | A0630 |
| **Iec Neon Colour:** | Red |
| **Iec Vertical Module Height:** | 67.5mm |
| **Inlet Type:** | C14 Cold Condition Inlet |
| **Voltage Max:** | 250V |

### // Product PDF Links

Power Entry Modules product data

### // Product 3D CAD Model Links

BVA02/A0630/033D CAD Model