BVA15/A0420/08 Datasheet

Product Name // Vertical Power Entry Module 67.5mm Top Fixing Flange Mount C14 Cold Condition Inlet Integral Twin Fused (PF0033) 6.3mm Tab Termination A0420 Filter (4A PS26/A L/C v2) Single Contact Illuminated Switch Green

View Product Page



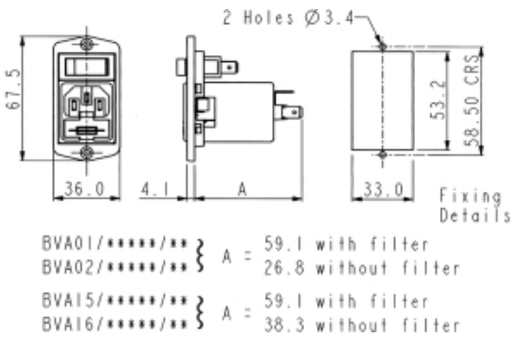

// Product Description:

- Vertical Power Entry Module 67.5mm/81.5mm (part codes prefixed BVA) and 59mm/72.3mm (part codes prefixed BVB)
- Screw fix to panel via choice of fixing flanges, depending on part code:
- Part codes prefixed BVA: Top fixing flanges
- Part codes prefixed BVB: Side fixing flanges
- C14 Cold Condition Inlet with integral fuseholder(s) depending on part code:
- Part codes prefixed BVA01, BVB01, BVA02, BVB02: PF0011 Single Fused Inlet
- Part codes prefixed BVA15, BVB15, BVA16, BVB16: PF0033 Twin Fused Inlet
- Choice of Termination depending on part code:
- Part codes prefixed BVA01, BVB01, BVA15, BVB15: 6.3mm Tab
- Part codes prefixed BVA02, BVB02, BVA16, BVB16: 2.8mm Tab
- Choice of mains filter depending on part code:
- Part codes containing /Z0000 are unfiltered
- Choice of mains filter options (part codes containing codes starting /A)
- Choice of many other options as specified by individual part code, including indicators, illuminated switches, switch markings, etc

// General Information:

Product Display Title:	Vertical Power Entry Module 67.5mm/81.5mm (part codes prefixed BVA) and 59mm/72.3mm (part codes prefixed BVB)
Product Family:	IEC Connectors
Product Series:	Power Entry Modules
Current Max:	4A
Filter Type:	4A PS26/A L/C v2
Function:	C14 Inlets
Fuseholder Inlet Type:	Integral Twin Fused
Iec Connector Components:	None
Iec Connector Mates With:	PF0033
Iec Filter Options:	A0420
Iec Neon Colour:	Green
Iec Vertical Module Height:	67.5mm
Inlet Type:	C14 Cold Condition Inlet
Switch Type:	Single Contact Illuminated
Voltage Max:	250V

// Product PDF Links

Power Entry Modules product data

// Product 3D CAD Model Links

BVA15/A0420/083D CAD Model