EXP-A921/05/P/7 Datasheet

Product Name // Inline Cable Connector Large Cable EXP-A921 Series 5 Contact Plug 14mm-16mm Cable (Dark Grey Gland)

View Product Page



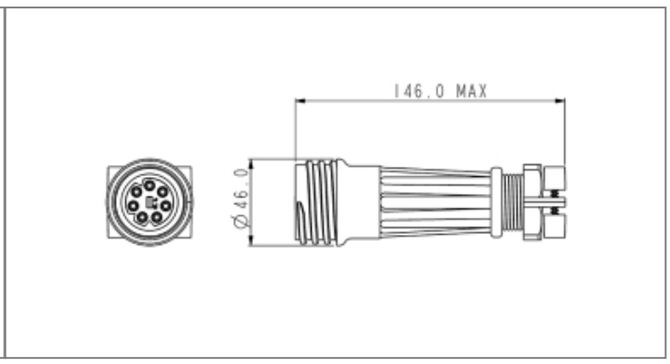

// Product Description:

- Inline Cable Connectors for hazardous areas
- Water and dustproof to IP68 when mated with compatible connector
- Positive fast-acting locking ring - can be turned with a gloved hand
- Plug or Socket
- 2, 3, 4, 5, 7, 10 Contact with leading Earth on 3, 4, 5, 7 Contact versions, trailing Neutral on 5 Contact version
- Screw Terminals
- Choice of cable acceptance 7mm-22mm diameter depending on part code (see data for details):
- EXP-09 part codes 7mm-15mm diameter
- EXP-A9 part codes (large cable version with strain relief clamp) 14mm-22mm diameter
- Packs of Cable Glands for differing cable diameters available separately (EXP-0980, EXP-A980)
- EXP-0991 heavy duty Sealing Cap available separately to maintain IP rating of unmated connectors
- Mate with EXP-09 or EXP-A9 Series Flex and Panel Mount Connectors, as appropriate

// General Information:

Product Display Title:	Inline Cable Connectors for hazardous areas
Product Family:	Circular Power Connectors
Product Series:	EXPlora
Approvals:	UL
Body Material:	Polyester (PET)
Body Material Type:	Plastic Body
Contact Type:	Plug Contact
Coupling Type:	Screw
Current Max:	18A
Diameter Over Coupling Ring Mm:	58mm
Flamability Rating:	UL94V-0
Function:	Inline Cable Connector
Ip Rating:	IP68
Max Cable Entry Size:	16mm
Min Cable Entry Size:	14mm
Max Contact Accomodation Awg:	14AWG
Min Contact Accomodation Awg:	10AWG
Max Contact Accomodation Mm2:	4mm2
Min Contact Accomodation Mm2:	2.5mm2
Max Operating Temperature:	+55°C
Min Operating Temperature:	-20°C
Number Of Contacts:	5 Contacts
Voltage Max:	600V

// Product PDF Links

EXPlora Series power connectors...

// Product 3D CAD Model Links

EXP-A921/05/P/73D CAD Model