PPCEGG3K26CLL Datasheet

Product Name // 26 Contacts Fixed Socket 3Y Series Push Pull Connector

View Product Page

* Representative product image only

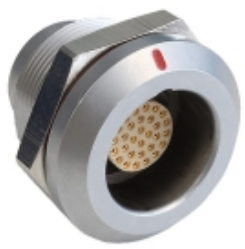

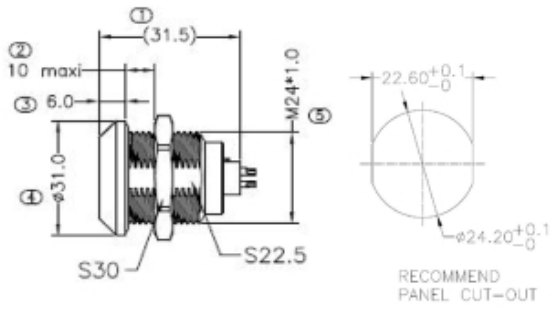

// Product Description:

- 26 Contacts Fixed Socket 3Y Series Push Pull Connector
- M24x1.0mm Thread
- Nut Installation torque 12Nm
- Available in Straight Plug version
- ROHS compliance
- IP66 rated
- Temp:-50 C to +200 C
- Solder Terminals
- Durability >4500 cycles
- Operating humidity up to 95%
- Salt Spray Corrosion Test >144h
- High packing density for space savings on panel mounts

// General Information:

Product Display Title:	3Y Series Fixed Socket Push Pull Connector
Product Family:	Circular Automation Connectors
Product Series:	Push Pull Connectors Y Series
Contact Pin Material:	Phosphor bronze gold plated 3u"
Coupling Nut Retention Force:	12Nm
Current Max:	4A
Diameter Over Coupling Ring Mm:	31mm
Durability:	>4500 cycles
Fixing Nut Material:	Nickel Plated brass
Function:	Fixed Socket Push Pull Connector
Insulator:	PPS
Ip Rating:	IP66
Max Contact Accomodation Awg:	22AWG
Max Contact Accomodation Mm2:	0.34mm2
Max Operating Temperature:	+200°C
Min Operating Temperature:	-50°C
Max Panel Thickness:	10mm
Number Of Contacts:	26 Contacts
Operating Humidity:	0.95
Panel Cut Out:	24.20mmx22.60mm
Pin Pin Terminal Voltage:	950V
Pin Shell Terminal Voltage:	700V
Push Pull Connector Series:	3Y Series
Rohs Compliant:	Yes
Salt Spray Corrosion Test:	48h
Shielding Efficiency Min:	95dB
Shielding Efficiency Max:	80dB
Shock Resistance:	100g
Terminal Diameter:	0.7mm
Thread Size:	M24x1.0mm
Vibration Resistance Min:	10Hz
Vibration Resistance Max:	2000Hz

// Product PDF Links

Push-Pull Connector Y Series...

// Product 3D CAD Model Links

PPCEGG3K26CLL3D CAD Model