PX0695/30/28 Datasheet

Product Name // IEC Connector Snap Fit To Panel Outlet PX0695 Series 3mm Panel Black 2.8mm Solder Tag Termination EN60 320-2-2 Standard Sheet F Class I

View Product Page



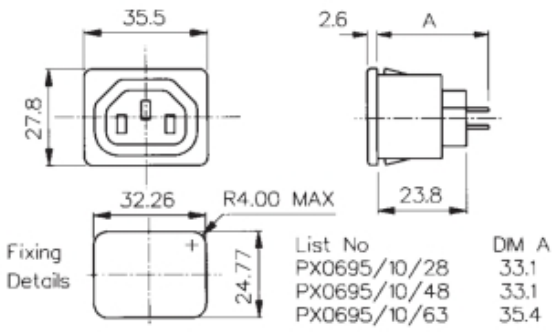

// Product Description:

- Snap Fit Panel Mount IEC Outlets
- EN60 320-2-2 Standard Sheet F Class I
- Choice of panel thickness depending on part code: /10 - 1mm, /15 - 1.5mm, /20 - 2mm, /30 - 3mm
- Choice of Termination depending on part code: /28 - 2.8mm Solder Tag, /63 - 6.3mm Tab, /PC - PCB Spills
- Choice of colour depending on part code: /WH - White, /GY - Grey, no suffix - Black (some approvals apply to specific colours only - see data for details)
- Insulation Boot for rear of connector available separately (part code 12075) for all versions except PCB Mount
- Blanking Cover for front of connector available separately (part code 14228)
- Mate with PX0685, PX0686, PX0686/SE

// General Information:

Product Display Title:	Snap Fit Panel Mount IEC Outlets
Product Family:	IEC Connectors
Product Series:	IEC60320 Main Inlets and Outlets
Approvals:	CSA, ENEC, UL, VDE
Body Material:	Nylon 66
Current Max:	10A, 15A
Flamability Rating:	UL94V-0
Function:	Panel Mount Connector
Iec Connector Colour:	Black
Iec Connector Mates With:	PX0685,PX0686,PX0686/SE
Iec En60620 Type:	EN60 320-2-2 Standard Sheet F Class I
Max Operating Temperature:	+70°C
Min Operating Temperature:	-40°C
Max Panel Thickness:	3mm
Min Panel Thickness:	3mm
Number Of Contacts:	3 Contacts
Voltage Max:	250V

// Product PDF Links

IEC Connectors product data

// Product 3D CAD Model Links

PX0695/30/283D CAD Model