PX0725/20/63/GY Datasheet

Product Name // IEC Connector Snap Fit To Panel Outlet 2 Pin PX0725 Series 2mm Panel Grey 6.3mm Tab Termination EN60 320-2-2 Standard Sheet H Class II

View Product Page



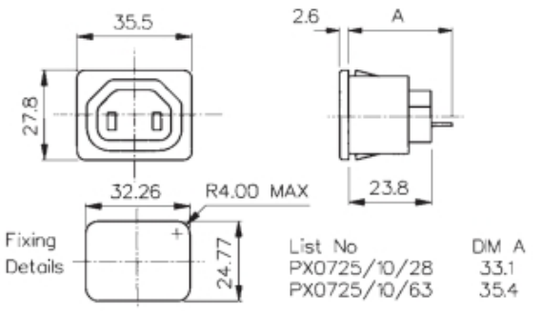

// Product Description:

- Snap Fit To Panel Mount IEC Outlets
- EN60 320-2-2 Standard Sheet H Class II
- Two Pin Class II (no Earth pin)
- Choice of panel thickness depending on part code: /10 - 1mm, /15 - 1.5mm, /20 - 2mm, /30 - 3mm
- Choice of Termination depending on part code: /28 - 2.8mm Solder Tag, /48 - 4.8mm Tab, /63 - 6.3mm Tab
- Choice of colour depending on part code: /WH - White, /GY - Grey, no suffix - Black (some approvals apply to specific colour and/or Termination choices only - see data for details)
- Insulation Boot for rear of connector available separately (part code 12075)

// General Information:

Product Display Title:	Snap Fit To Panel Mount IEC Outlets
Product Family:	IEC Connectors
Product Series:	IEC60320 Main Inlets and Outlets
Approvals:	CSA, UL
Body Material:	Nylon 66
Current Max:	15A
Flamability Rating:	UL94V-0
Function:	Panel Mount Connector
Iec Connector Colour:	Grey
Iec En60620 Type:	EN60 320-2-2 Standard Sheet H Class II
Max Operating Temperature:	+70°C
Min Operating Temperature:	-40°C
Max Panel Thickness:	2mm
Min Panel Thickness:	2mm
Number Of Contacts:	2 Contacts
Voltage Max:	250V

// Product PDF Links

IEC Connectors product data

// Product 3D CAD Model Links

PX0725/20/63/GY3D CAD Model