PX0762/S/GN2 Datasheet

bulgin

View Product Page

Product Name // Bulkhead Flange Mount Connector PX0762 Series 9 Contact Socket Crimp Termination (Contacts Supplied Loose) Green Insert

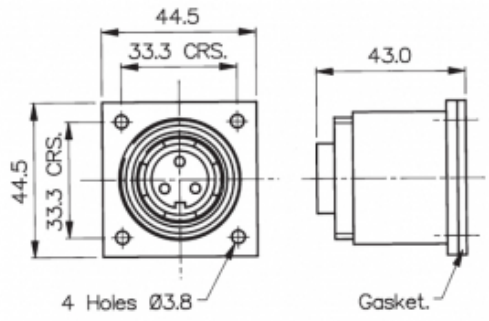

// Product Description:

- Bulkhead Flange Mount Connectors
- Water and dustproof to IP68 when mated with compatible connector
- Screw fixing flange, supplied with sealing gasket and screw sealing grommets
- Plug or Socket
- 2, 3, 4, 6, 7, 9, 12, 25 Contact with leading Earth contact on 3 Contact Socket versions
- Screw, Crimp, Crimp/Solder Terminations available, depending on part code and number of Contacts
- Screw contacts supplied fitted, Crimp contacts supplied loose (Crimp/Solder contacts and fitting tools available separately)
- Choice of coloured inserts to enable positive visual identification of connector:
- Part codes suffixed with a colour code followed by 2 have that colour insert
- Colour choices and colour codes: Blue (BL), Green (GN), Grey (GY), Light Grey (LG), Red (RD), White (WH), Yellow (YL), Black (standard colour, no suffix code)
- PX0733 Sealing Cap available separately to maintain IP rating of unmated connectors
- Mate with PX07 Series Flex Connectors

// General Information:

Product Display Title:	Bulkhead Flange Mount Connectors
Product Family:	Circular Power Connectors
Product Series:	Standard Buccaneer
Approvals:	CSA, UL, VDE
Body Material:	Polyamide (PA)- Glass Filled
Contact Type:	Socket Contact
Coupling Type:	Screw
Current Max:	5A
Diameter Over Coupling Ring Mm:	38.1mm
Flamability Rating:	UL94HB
Function:	Bulkhead Flange Mount Connector
Insert Colour:	Green Insert
Ip Rating:	IP68, IP69K
Max Operating Temperature:	+70°C
Min Operating Temperature:	-20°C
Number Of Contacts:	9 Contacts
Voltage Max:	150V

// Product PDF Links

Standard Series power connectors...

Standard Series power connectors...