PX0802 Datasheet

Product Name // Mini Series Panel Mount Connector Body

View Product Page



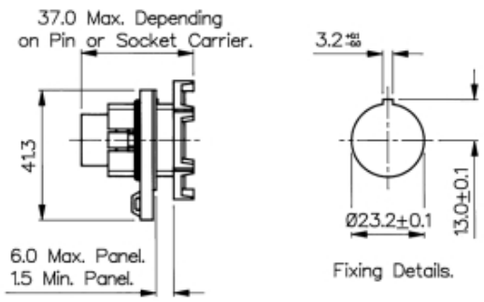

// Product Description:

- Mini Series of modular connectors
- Water and dustproof to IP68 when mated with compatible connector
- Choose type of connector body:
- Part codes prefixed PX0800 - Flex Cable Connectors (mate with PX0801 Flex In-Line Cable Connectors, PX08 Mini Series Panel Mount Connectors), optionally choose cable acceptance
- Part codes prefixed PX0801 - Flex In-Line Cable Connectors (mate with PX0800 Flex Cable Connectors), optionally choose cable acceptance
- Part codes prefixed PX0802, PX0803, PX0804, PX0805 - Panel Mount Connectors (mate with PX08 Mini Series Flex Cable Connectors)
- Choose type of contacts from Screw Terminal, Solder/Crimp Contacts, BNC
- Choose number of connector Poles and select appropriate connector insert/contact carrier:
- Screw Terminal inserts available separately in 2, 3, 4, 6 Pole, Pin or Socket
- Solder, Crimp Contact carriers available separately in 3, 8 Pole; select appropriate Contact Pins or Sockets and Polarising/Blanking Pins, Contact Insertion Tool, Crimping Tool as required (all available separately)
- BNC Plug or Socket insert available separately in 50 Ohm, 75 Ohm versions for all connector body styles except PX0803
- PX0800, PX0801 Flex and Flex In-Line Cable Connector bodies have a choice of cable acceptance 3.5mm-9mm diameter depending on part code (see data for details)
- Pack of Cable Glands for differing cable sizes also available separately (PX0812)
- Sealing Caps (available separately) can be used to maintain IP rating of unmated connectors:
- PX0811 fits PX0800 Flex Cable Connector
- PX0810 fits all other connectors in the PX08 Mini Series

// General Information:

Product Display Title:	Mini Series of modular connectors
Product Family:	Circular Power Connectors
Product Series:	Mini Buccaneer
Approvals:	UL
Body Material:	Polyamide
Body Material Type:	Plastic Body
Coupling Type:	Screw
Current Max:	N/A
Diameter Over Coupling Ring Mm:	26mm
Flamability Rating:	UL94V-0
Function:	Panel Mount Connector
Ip Rating:	IP68
Max Operating Temperature:	+70°C
Min Operating Temperature:	-20°C
Voltage Max:	N/A

// Product PDF Links

Mini Series power connectors...

Mini Series connectors wiring...

// Product 3D CAD Model Links

PX08023D CAD Model