PX0921/02/S Datasheet

Product Name // Inline Cable Connector PX0921 Range 2 Contact Socket 13mm-15mm Cable (Yellow Gland)

View Product Page



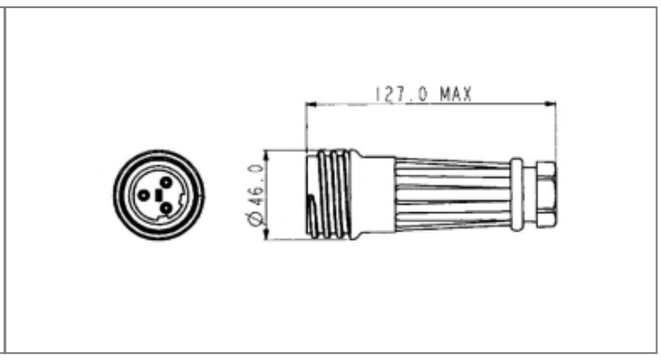

// Product Description:

- Inline Cable Connectors
- Water and dustproof to IP68 when mated with compatible connector
- Positive fast-acting locking ring - can be turned with a gloved hand
- Plug or Socket
- 2, 3, 4, 5, 7, 10 Contact with leading Earth on 3, 4, 5, 7 Contact versions, trailing Neutral on 5 Contact version
- Screw Terminals
- Choice of cable acceptance 7mm-22mm diameter depending on part code (see data for details):
- PX09 part codes 7mm-15mm diameter
- PXA9 part codes (large cable version with strain relief clamp) 14mm-22mm diameter
- Packs of Cable Glands for differing cable diameters available separately (PX0980, PXA980)
- PX0970/PX0991 Sealing Caps available separately to maintain IP rating of unmated connectors
- Mate with PX0911 or PXA911 Series Flex Connectors, as appropriate

// General Information:

Product Display Title:	Inline Cable Connectors
Product Family:	Circular Power Connectors
Product Series:	900 Series Buccaneer
Approvals:	UL
Body Material:	Polyamide (PA)
Body Material Type:	Plastic Body
Contact Type:	Socket Contact
Coupling Type:	Screw
Current Max:	32A
Diameter Over Coupling Ring Mm:	58mm
Flamability Rating:	UL94V-0
Function:	Inline Cable Connector
Ip Rating:	IP68
Max Cable Entry Size:	15mm
Min Cable Entry Size:	13mm
Max Contact Accomodation Awg:	13AWG
Min Contact Accomodation Awg:	10AWG
Max Contact Accomodation Mm2:	4mm2
Min Contact Accomodation Mm2:	2.6mm2
Max Operating Temperature:	+85°C
Min Operating Temperature:	-40°C
Number Of Contacts:	2 Contacts
Voltage Max:	600V

// Product PDF Links

900 Series power connectors...

900 Series power connectors wiring...

// Product 3D CAD Model Links

PX0921/02/S3D CAD Model