PXEB5200MM5055 Datasheet

Product Name // 2 Channel Plug Connector

View Product Page



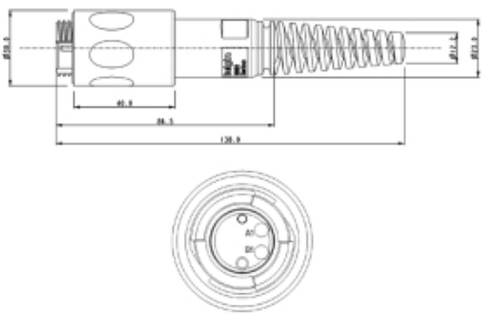

// Product Description:

- Non-terminated Plug Connector for a 2-Channel Multimode Cable with 5-5.5mm Diameter
- Designed to MIL-DTL83526D
- Compatible with any connector that follows MIL-DTL83526D
- Compatible with OM1 & OM3
- Dust Cap, Lanyard, and Ferrules (termini) for the Cable Included
- Mates with Plug, Jam Nut, and Flange Mount Connectors (hermaphroditic)
- Operating Temperature -50°C to +80°C
- Available in 4 Channel
- Cable Assembly Available

// General Information:

Product Display Title:	2 Channel Plug Connector
Product Family:	Circular Fiber Connectors
Product Series:	5000 Series Expanded Beam
Max Insertion Loss:	<2dB
Avg Insertion Loss:	<1.5dB
Body Colour:	Dark Grey
Body Material:	Polycarbonate/Polybutylene Terephthalate (PC/PBT)
Body Material Type:	Plastic Body
Contact Type:	Expanded Beam
Coupling Type:	Screw
Diameter Over Coupling Ring Mm:	30mm
Fibre Mode:	MM
Flamability Rating:	UL94V-0
Function:	EB Plug Connector
Ip Rating:	IP68
Material Finish:	Matt
Max Cable Entry Size:	5.5mm
Min Cable Entry Size:	5mm
Max Operating Temperature:	+80°C
Min Operating Temperature:	-50°C
Rohs Compliant:	Yes

// Product PDF Links

5000 Series Expanded Beam Product...

// Product 3D CAD Model Links

PXEB5200MM50553D CAD Model