PXEB5202B100 Datasheet

Product Name // 2 Channel Plug to LC Connector Cable Assembly

View Product Page



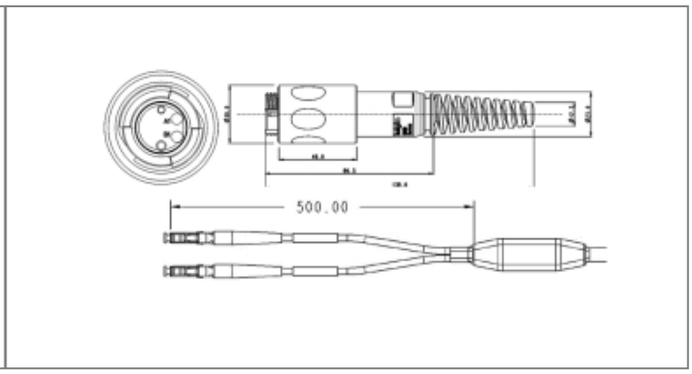

// Product Description:

- A Terminated Plug Connector with a 2-Channel OM1 Outdoor Tactical Cable that breaks out in 2 independent cables (0.5m long) with LC Terminations - 100m Long Cable Assembly
- Designed to MIL-DTL83526D
- Compatible with any connector that follows MIL-DTL83526D
- Dust Cap for all Connectors & Plug Lanyard Included
- Mates with Plug, Jam Nut, & Flange Mount Connectors (hermaphroditic)
- Operating Temperature -50°C to +80°C
- Available in 4 Channel
- Available in Plug to Plug & Plug to SC Cable Assembly

// General Information:

Product Display Title:	2 Channel Plug to LC Connector Cable Assembly
Product Family:	Circular Fiber Connectors
Product Series:	5000 Series Expanded Beam
Max Insertion Loss:	<2dB
Avg Insertion Loss:	<1.5dB
Body Colour:	Dark Grey
Body Material:	Polycarbonate/Polybutylene Terephthalate (PC/PBT)
Body Material Type:	Plastic Body
Contact Type:	Expanded Beam
Coupling Type:	Screw
Diameter Over Coupling Ring Mm:	30mm
Fibre Mode:	OM1
Flamability Rating:	UL94V-0
Function:	EB Plug to LC Double Ended Fiber Cable
Ip Rating:	IP68
Material Finish:	Matt
Max Operating Temperature:	+80°C
Min Operating Temperature:	-50°C
Rohs Compliant:	Yes

// Product PDF Links

5000 Series Expanded Beam Product...

// Product 3D CAD Model Links

PXEB5202B1003D CAD Model