PXEB5212C005 Datasheet

Product Name // 2 Channel Jam Nut to LC Connector Cable Assembly

View Product Page

* Representative product image only

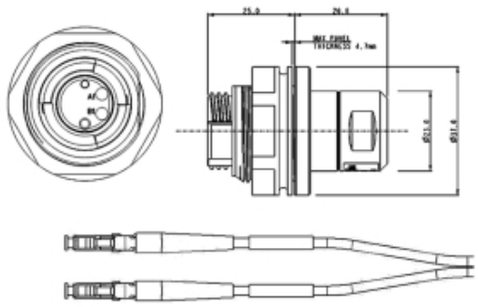

// Product Description:

- A Terminated Jam Nut Bulkhead (JNBH) Connector with 2 (OM3) LC terminated independent cables - 5m Long Cable Assembly
- Designed to MIL-DTL83526D
- Compatible with any connector that follows MIL-DTL83526D
- Dust Cap for all Connectors & Jam Nut Lanyard Included
- Mates with Plug Connectors (hermaphroditic)
- Operating Temperature -50°C to +80°C
- Available in 4 Channel
- Available in Jam Nut to SC Cable Assembly

// General Information:

Product Display Title:	2 Channel Jam Nut to LC Connector Cable Assembly
Product Family:	Circular Fiber Connectors
Product Series:	5000 Series Expanded Beam
Max Insertion Loss:	<2dB
Avg Insertion Loss:	<1.5dB
Body Colour:	Dark Grey
Body Material:	Polycarbonate/Polybutylene Terephthalate (PC/PBT)
Body Material Type:	Plastic Body
Contact Type:	Expanded Beam
Coupling Nut Retention Force:	1Nm
Coupling Type:	Screw
Diameter Over Coupling Ring Mm:	30mm
Fibre Mode:	OM3
Flamability Rating:	UL94V-0
Function:	EB Jam Nut to LC Double Ended Fiber Cable
Ip Rating:	IP68
Material Finish:	Matt
Max Operating Temperature:	+80°C
Min Operating Temperature:	-50°C
Max Panel Thickness:	4.7mm
Rohs Compliant:	Yes

// Product PDF Links

5000 Series Expanded Beam Product...

// Product 3D CAD Model Links

PXEB5212C0053D CAD Model