PXF6054CAE Datasheet

Product Name // 50 M, OS1 Single Mode, Cabled, Flex fiber connector

View Product Page



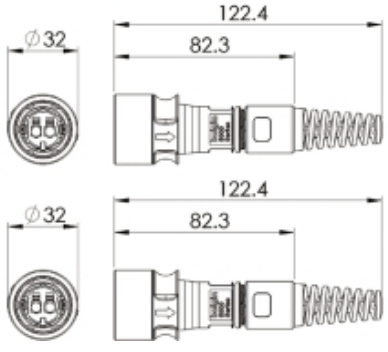

// Product Description:

- Flex Fiber Connector to Inline Fiber Connector
- Sealed to IP66, IP68, IP69K when mated with compatible connector
- no cable options, or pre-terminated from 5M - 450M available
- Duplex LC type fiber connector
- Choices of OS1, OM1 and OM3 cables for single or multimode
- PXP6083 Sealing Cap available separately to maintain IP rating of unmated connectors
- Mate with Inline fiber connector or panel mount connectors PXF6051, PXF6052

// General Information:

Product Display Title:	Flex Fiber Connector to Inline Fiber Connector
Product Family:	Circular Fiber Connectors
Product Series:	6000 Series - Duplex LC Fiber Buccaneer
Body Material:	Polyamide (PA)
Contact Type:	LC Fiber
Coupling Type:	30 Degree coupling
Diameter Over Coupling Ring Mm:	32mm
Fibre Mode:	OS1
Flamability Rating:	UL94V-0
Function:	Flex to Double LC Connector Double Ended Fiber Cable
Ip Rating:	IP66, IP68, IP69K
Max Operating Temperature:	+70°C
Min Operating Temperature:	-25°C

// Product PDF Links

6000 Series Fiber connectors...

// Product 3D CAD Model Links

PXF6054CAE3D CAD Model