PXM06276FANBKUS Datasheet

Product Name // Black Anodised Aluminium Flange Mount Connector with Cap and Mounting Hardware - Unshielded - Cat6a Female

View Product Page



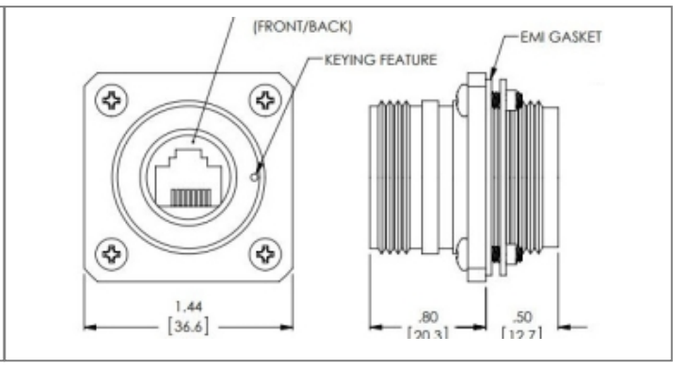

// Product Description:

- Black Anodised Aluminium Flange Mount Connector with Cap and Mounting Hardware - Unshielded - Cat6a Female
- IP68 rated when mated
- Durability >500 cycles
- Operating temperature -40°C to +100°C
- Supports 10, 100 and 1,000 Mbps data transmissions
- POE, POE+, and POE++
- Hardware: Stainless Steel, Seals: Silicone, Lanyard: Stainless Steel (Nylon coated)

// General Information:

Product Display Title:	Black Anodised Aluminium Flange Mount Connector with Cap and Mounting Hardware - Unshielded - Cat6a Female
Product Family:	Circular Data Connectors
Product Series:	600 Series - Ethernet Buccaneer Connectors
Body Colour:	Black
Body Length:	33mm
Body Material:	Aluminium
Body Material Type:	Metal Body
Connection Method:	Latching
Contact Type:	Female
Coupling Type:	Screw
Diameter Over Coupling Ring Mm:	35mm
Durability:	>500 cycles
Ethernet Category:	Cat 6a
Flange Mount Length:	36.6mm
Function:	Flange Mount Connector
Ip Rating:	IP68
Material Finish:	Anodised
Min Operating Temperature:	-40°C
Max Panel Thickness:	5mm
Min Panel Thickness:	1.5mm
Mount Hole Distance:	27mm
Operating Humidity:	43°C - 98%
Max Operating Frequency:	+100°C
Rohs Compliant:	Yes
Salt Spray Corrosion Test:	500hr
Shock Resistance:	100G - 6ms

// Product PDF Links

Standard Series USB connectors...

// Product 3D CAD Model Links

PXM06276FANBKUS3D CAD Model