PXM6010/22P/CR/0910/SN Datasheet

Product Name // Flex Cable Connector PXM6010 Series 22 Contact Plug Crimp/Solder Termination (contacts available separately) 9mm-10mm Cable (Light Grey Gland) Metal Body With Braid Termination

View Product Page



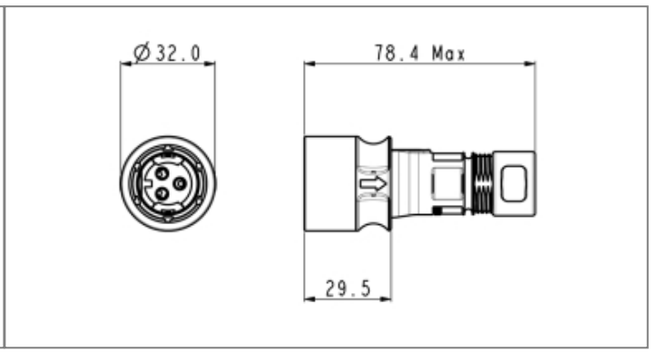

// Product Description:

- Flex Cable Connectors
- Water and dustproof to IP66, IP68, IP69K when mated with compatible connector
- 30 degree push twist locking, tamperproof lock prevents accidental un-mating
- Plug
- 22 Contacts
- Crimp/solder termination with contacts and fitting tool available separately
- Metal Body With Braid Termination
- Cable acceptance 9mm-10mm diameter
- Gland Pack PXP6088 available separately to accomodate all sizes
- PXM6081 Sealing Cap available separately to maintain IP rating of unmated connectors
- Mate with PXM6011 Series Inline and PXM6012 Series Front Panel Mount Connectors

// General Information:

Product Display Title:	Flex Cable Connectors
Product Family:	Circular Power Connectors
Product Series:	6000 Series Buccaneer
Approvals:	UL
Body Colour:	Metallic Grey
Body Material:	Brass
Body Material Type:	Metal Body With Braid Termination
Contact Type:	Plug Contact
Coupling Type:	Push-Twist
Current Max:	1.5A, 2A, 3A
Diameter Over Coupling Ring Mm:	32mm
Function:	Flex Cable Connector
Insulation Resistance:	>10?M? @500V DC
Ip Rating:	IP66, IP68, IP69K
Max Cable Entry Size:	10mm
Min Cable Entry Size:	9mm
Max Contact Accomodation Awg:	22AWG
Min Contact Accomodation Awg:	26AWG
Max Contact Accomodation Mm2:	0.34mm2
Min Contact Accomodation Mm2:	0.14mm2
Max Operating Temperature:	+120°C
Min Operating Temperature:	-40°C
Number Of Contacts:	22 Contacts
Rohs Compliant:	Yes
Salt Spray Corrosion Test:	EN60068-2-11 Test Ka Salt Mist
Voltage Max:	60V

// Product PDF Links

6000 Series power connectors...

6000 Series metal body power...

// Product 3D CAD Model Links

PXM6010/22P/CR/0910/SN3D CAD Model