PXM6011/03P/ST/0405/SN Datasheet

Product Name // Inline Cable Connector PXM6011 Series 3 Contact Plug Screw Termination (contacts supplied fitted) 4mm-5mm Cable (Dark Grey Gland) Metal Body With Braid Termination

View Product Page



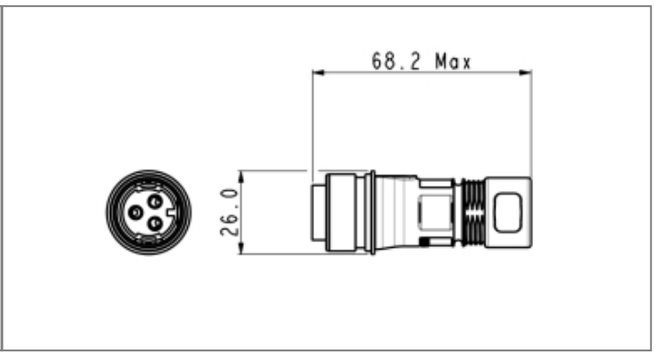

// Product Description:

- Inline Cable Connectors
- Water and dustproof to IP66, IP68, IP69K when mated with compatible connector
- 30 degree push twist locking, tamperproof lock prevents accidental un-mating
- Plug
- 3 Contacts
- Screw contacts supplied fitted
- Metal Body With Braid Termination
- Cable acceptance 4mm-5mm diameter
- Gland Pack PXP6088 available separately to accomodate all sizes
- PXM6082 Sealing Cap available separately to maintain IP rating of unmated connectors
- Mate with PXM6010 Series Flex Connectors

// General Information:

Product Display Title:	Inline Cable Connectors
Product Family:	Circular Power Connectors
Product Series:	6000 Series Buccaneer
Approvals:	UL
Body Colour:	Metallic Grey
Body Material:	Brass
Body Material Type:	Metal Body With Braid Termination
Contact Type:	Plug Contact
Coupling Type:	Push-Twist
Current Max:	16A, 11A
Diameter Over Coupling Ring Mm:	32mm
Function:	Inline Cable Connector
Insulation Resistance:	>10?M? @500V DC
Ip Rating:	IP66, IP68, IP69K
Max Cable Entry Size:	5mm
Min Cable Entry Size:	4mm
Max Contact Accomodation Awg:	16AWG
Min Contact Accomodation Awg:	18AWG
Max Contact Accomodation Mm2:	1.5mm2
Min Contact Accomodation Mm2:	0.75mm2
Max Operating Temperature:	+120°C
Min Operating Temperature:	-40°C
Number Of Contacts:	3 Contacts
Rohs Compliant:	Yes
Salt Spray Corrosion Test:	EN60068-2-11 Test Ka Salt Mist
Voltage Max:	277V

// Product PDF Links

6000 Series power connectors...

6000 Series metal body power...

// Product 3D CAD Model Links

PXM6011/03P/ST/0405/SN3D CAD Model