PXM7010/03S/ST/1315/SN Datasheet

Product Name // Flex Cable Connector PXM7010 Series 3 Contact Socket Screw Termination (contacts supplied fitted) 13mm-15mm Cable (Light Grey Gland) Metal Body With Braid Termination

View Product Page



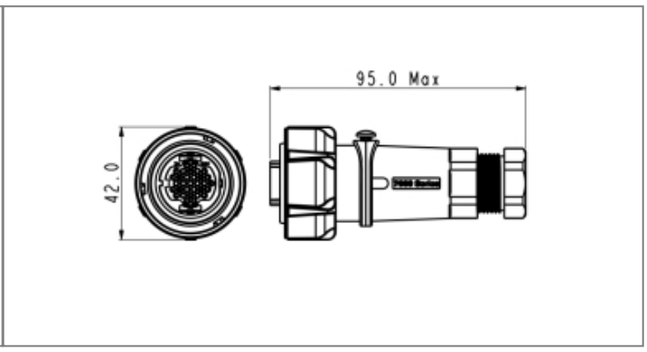

// Product Description:

- Flex Cable Connectors
- Water and dustproof to IP66, IP68, IP69K when mated with compatible connector
- Quick turn locking ring with less than quarter turn locking and positive feedback
- Plug or Socket
- 2, 3, 6, 10, 32 Contact with leading Earth contact on 3 Contact versions
- Screw, Crimp/Solder terminations available, depending on part code; Screw contacts supplied fitted, Crimp/Solder contacts and fitting tools available separately
- Choice of body material depending on part code:
- Plastic body (part codes prefixed PXP)
- Metal body (part codes prefixed PXM). Cable Braid Termination option supplied with part codes suffixed /SN or available separately (part code PXM7090)
- Choice of cable acceptance 5mm-15mm diameter depending on part code (see data for details)
- PXP7088 Series Gland Packs available separately to accomodate all sizes
- PXP7081/PXM7081 Sealing Cap available separately to maintain IP rating of unmated connectors
- Mate with PXP7011/PXM7011 Series Inline and PXP7012/PXM7012 Series Front Panel Mount Connectors

// General Information:

Product Display Title:	Flex Cable Connectors
Product Family:	Circular Power Connectors
Product Series:	7000 Series Buccaneer
Approvals:	UL
Body Material:	Zinc Alloy - Nickel Plated
Body Material Type:	Metal Body With Braid Termination
Contact Type:	Socket Contact
Coupling Type:	Bayonet Lock
Current Max:	25A
Diameter Over Coupling Ring Mm:	42mm
Flamability Rating:	UL94V-0
Function:	Flex Cable Connector
Ip Rating:	IP66
Max Cable Entry Size:	15mm
Min Cable Entry Size:	13mm
Max Contact Accomodation Awg:	10AWG
Min Contact Accomodation Awg:	10AWG
Max Contact Accomodation Mm2:	6mm2
Min Contact Accomodation Mm2:	6mm2
Max Operating Temperature:	+120°C
Min Operating Temperature:	-40°C
Number Of Contacts:	3 Contacts
Voltage Max:	600V

// Product PDF Links

7000 Series power connectors...

7000 Series metal body power...

// Product 3D CAD Model Links

PXM7010/03S/ST/1315/SN3D CAD Model