PXMBNI08RPM05APC Datasheet

Product Name // M8 Series A Code Brass Nickel Plated Rear Panel Mount Connector 5 Contact Pins PCB Termination

View Product Page

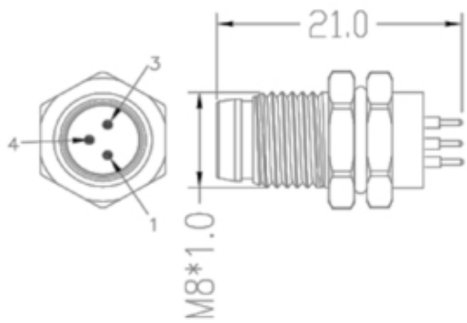

// Product Description:

- M8 Series Rear Panel Mount Connectors
- Water and dustproof to IP67 when mated with compatible connector
- Pin or Socket
- 3, 4, 5 Contact (3, 4 Contact are A Code, 5 Contact are B Code)
- PCB Terminal or Flying Lead Termination with choice of lead lengths, depending on part code
- Mate with M8 Series Inline Body and Flex Body Connectors, depending on part code

// General Information:

Product Display Title:	M8 Series Rear Panel Mount Connectors
Product Family:	Circular Automation Connectors
Product Series:	M8 Series
Approvals:	CSA, ENEC, UL, VDE
Body Material:	Brass - Nickel Plated
Contact Type:	Plug Contact
Coupling Type:	Screw
Current Max:	1.5A
Diameter Over Coupling Ring Mm:	12.5mm
Function:	Rear Panel Mount Connector
Ip Rating:	IP67
Max Operating Temperature:	+80°C
Min Operating Temperature:	-25°C
Number Of Contacts:	5 Contacts
Panel Cut Out:	Ø8mm
Pin Layout Code:	A Code
Thread Size:	M8 x 1
Voltage Max:	30V

// Product PDF Links

M8 Series automation connectors...

// Product 3D CAD Model Links

PXMBNI08RPM05APC3D CAD Model