PXMBNI78FPF03AFLPG135001 Datasheet

Product Name // 3 Contacts 7/8" Front Panel Mounting Female 100mm Flying Leads

View Product Page

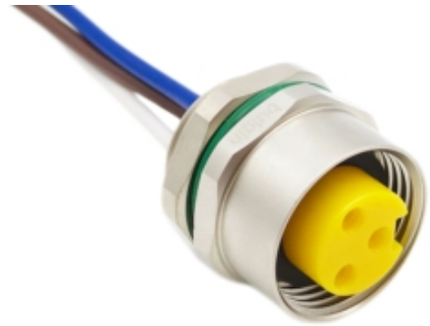

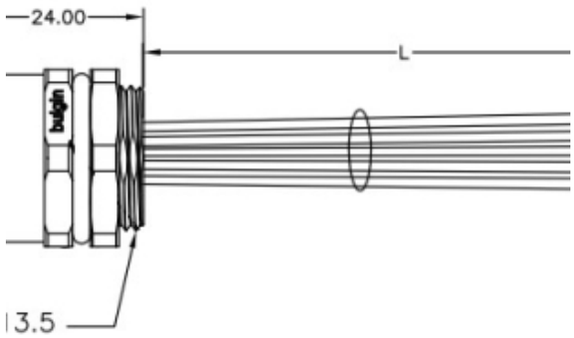

// Product Description:

- 3 Contacts 7-8" Front Panel Mounting Female 0.1M Cable
- IP67 rated when mated
- Mechanical Cycles >100
- Operating Temperature -25°C to +85°C
- Rated Voltage 300 V
- ROHS compliance

// General Information:

Product Display Title:	7/8" Front Panel Mounting Female 100mm Flying Leads
Product Family:	Circular Automation Connectors
Product Series:	7/8" Series
Cable Length:	0.1m
Connection Method:	Solder
Contact Type:	Socket Contact
Current Max:	12A
Durability:	>100 Cycles
Function:	Front Panel Mounting Female Connector with Flying Leads
Insulation Resistance:	>100MOhm
Ip Rating:	IP67
Max Operating Temperature:	+80°C
Min Operating Temperature:	-25°C
Number Of Contacts:	3 Contacts
Pin Layout Code:	A Code
Rohs Compliant:	Yes
Thread Size:	PG13.5
Voltage Max:	300V

// Product PDF Links

78 Series Circular connectors...

// Product 3D CAD Model Links

PXMBNI78FPF03AFLPG1350013D CAD...