PXMBNI78FPF04APCPG135 Datasheet

Product Name // 4 Contacts 7/8" Front Panel Mounting Female Connector

View Product Page



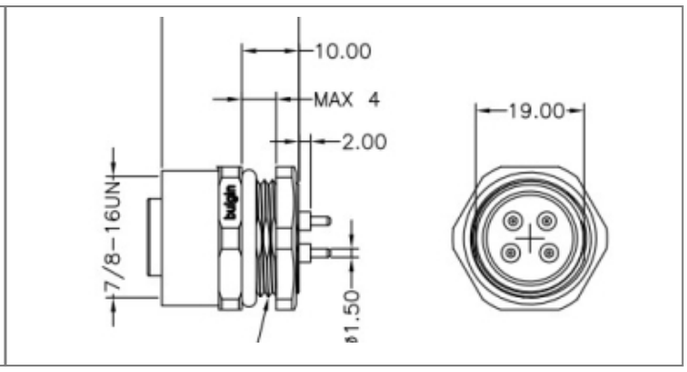

// Product Description:

- 3 Contacts 7-8" Front Panel Mounting Female Connector
- IP67 rated when mated
- Mechanical Cycles >100
- Operating Temperature -25°C to +85°C
- Rated Voltage 300 V
- ROHS compliance

// General Information:

Product Display Title:	7/8" Flex Body Female Connector
Product Family:	Circular Automation Connectors
Product Series:	7/8" Series
Connection Method:	PCB
Contact Pin Material:	Phosphor bronze gold plated 1u"
Contact Type:	Socket Contact
Current Max:	9A
Durability:	>100 Cycles
Function:	Front Panel Mounting Female Connector
Insulation Resistance:	>100MOhm
Ip Rating:	IP67
Max Operating Temperature:	+85°C
Min Operating Temperature:	-25°C
Max Panel Thickness:	4.0mm
Number Of Contacts:	4 Contacts
Panel Cut Out:	20.50mmx19.20mm
Pcb Thickness:	>2.5mm
Pin Layout Code:	A Code
Rohs Compliant:	Yes
Thread Size:	PG13.5
Voltage Max:	300V

// Product PDF Links

78 Series Circular connectors...

// Product 3D CAD Model Links

PXMBNI78FPF04APCPG1353D CAD Model