# PXP4001/005/10S Datasheet

## Product Name // Pre-wired Inline Cable Connector - 5m - 10 Contacts - Socket

View Product Page

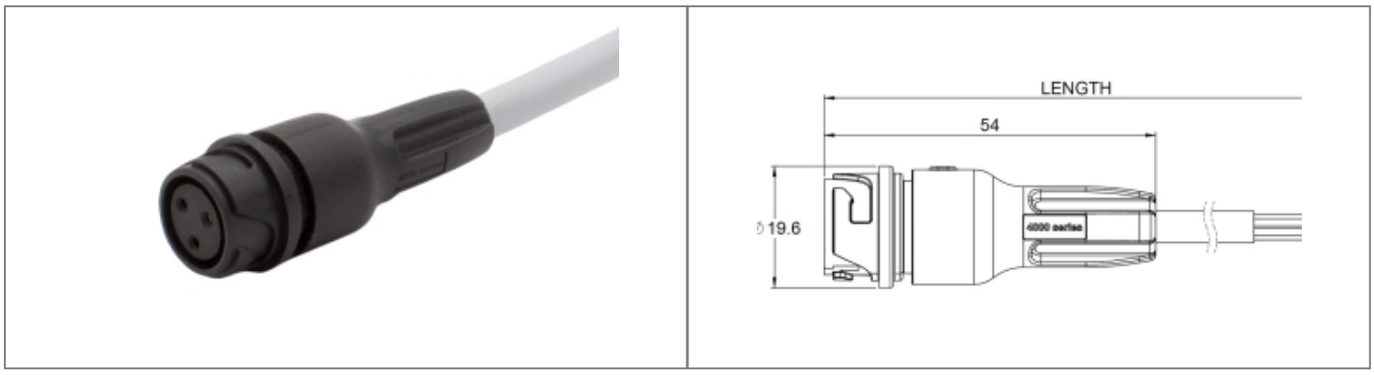


## // Product Description:

- Pre-Wired Inline Cable Connector
- Water and dustproof to IP68 when mated with compatible connector
- 4000 Series Buccaneer to blunt cut wire
- 5m Cable Length
- 10 Contacts - Socket
- Sealing Cap available separately to maintain IP rating of unmated connectors
- Mates with flex cable connectors

## // General Information:

| | |
|---|---|
| **Product Display Title:** | Pre-wired Inline Cable Connector - 5m - 10 Contacts - Socket |
| **Product Family:** | Circular Power Connectors |
| **Product Series:** | 4000 Series Buccaneer |
| **Approvals:** | cUL, UL, VDE |
| **Body Colour:** | Black |
| **Body Material:** | Polyamide (PA) |
| **Body Material Type:** | Plastic Body |
| **Cable Length:** | 5m |
| **Contact Type:** | Socket Contact |
| **Coupling Type:** | Bayonet Lock |
| **Current Max:** | 3A |
| **Diameter Over Coupling Ring Mm:** | 19.7mm |
| **Flamability Rating:** | UL94V-0 |
| **Function:** | Inline Cable Connector |
| **Ip Rating:** | IP66, IP67, IP68 |
| **Max Operating Temperature:** | +120°C |
| **Min Operating Temperature:** | -30°C |
| **Number Of Contacts:** | 10 Contacts |
| **Rohs Compliant:** | Yes |
| **Voltage Max:** | 160V |

### // Product PDF Links

4000 Series power connectors...

### // Product 3D CAD Model Links

PXP4001/005/10S3D CAD Model