PXP4002/003/02P Datasheet

Product Name // Pre-wired Flex Cable Connector - Right Angle - 3m - 2 Contacts - Plug

View Product Page

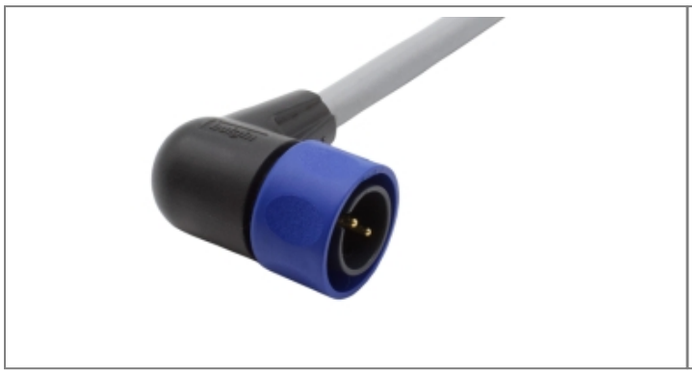

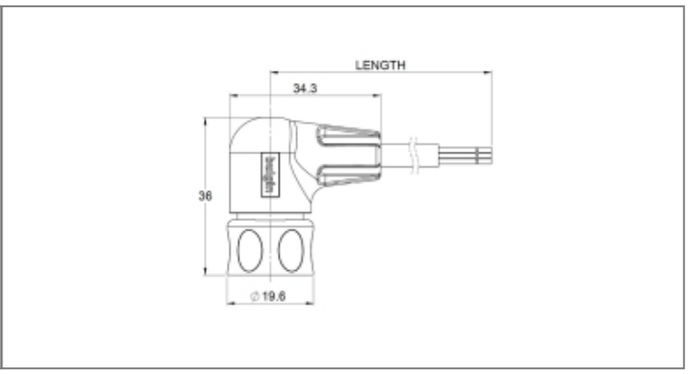

// Product Description:

- Pre-Wired Flex Cable Connector - Right Angle
- Water and dustproof to IP68 when mated with compatible connector
- 4000 Series Buccaneer to blunt cut wire
- 3m Cable Length
- 2 Contacts - Plug
- Sealing Cap available separately to maintain IP rating of unmated connectors
- Mates with front and rear panel mounting connectors - and inline cable connectors

// General Information:

Product Display Title:	Pre-Wired Flex Cable Connector
Product Family:	Circular Power Connectors
Product Series:	4000 Series Buccaneer
Approvals:	cUL, UL, VDE
Body Colour:	Black
Body Material:	Polyamide (PA)
Body Material Type:	Plastic Body
Cable Length:	3m
Contact Type:	Plug Contact
Coupling Type:	Bayonet Lock
Current Max:	13A
Diameter Over Coupling Ring Mm:	19.7mm
Flamability Rating:	UL94V-0
Function:	Flex Cable Connector
Ip Rating:	IP66, IP67, IP68
Max Operating Temperature:	+120°C
Min Operating Temperature:	-30°C
Number Of Contacts:	2 Contacts
Rohs Compliant:	Yes
Voltage Max:	600V

// Product PDF Links

4000 Series power connectors...

// Product 3D CAD Model Links

PXP4002/003/02P3D CAD Model