PXP6011/22S/CR/0405 Datasheet

Product Name // Inline Cable Connector PXP6011 Series 22 Contact Socket Crimp/Solder Termination (contacts available separately) 4mm-5mm Cable (Dark Grey Gland) Plastic Body

View Product Page



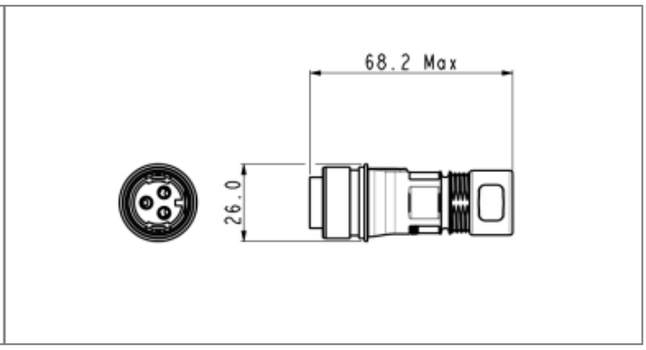

// Product Description:

- Inline Cable Connectors
- Water and dustproof to IP66, IP68, IP69K when mated with compatible connector
- 30 degree push twist locking, tamperproof lock prevents accidental un-mating
- Socket
- 22 Contacts
- Crimp/solder termination with contacts and fitting tool available separately
- Plastic Body
- Cable acceptance 4mm-5mm diameter
- Gland Pack PXP6088 available separately to accomodate all sizes
- PXP6082 Sealing Cap available separately to maintain IP rating of unmated connectors
- Mate with PXP6010 Series Flex Connectors

// General Information:

Product Display Title:	Inline Cable Connectors
Product Family:	Circular Power Connectors
Product Series:	6000 Series Buccaneer
Approvals:	UL
Body Colour:	Grey
Body Material:	Polycarbonate/Polybutylene Terephthalate (PC/PBT)
Body Material Type:	Plastic Body
Contact Type:	Socket Contact
Coupling Type:	Push-Twist
Current Max:	1.5A, 2A, 3A
Diameter Over Coupling Ring Mm:	32mm
Flamability Rating:	UL94V-0
Function:	Inline Cable Connector
Insulation Resistance:	>10?M? @500V DC
Ip Rating:	IP66, IP68, IP69K
Max Cable Entry Size:	5mm
Min Cable Entry Size:	4mm
Max Contact Accomodation Awg:	22AWG
Min Contact Accomodation Awg:	26AWG
Max Contact Accomodation Mm2:	0.34mm2
Min Contact Accomodation Mm2:	0.14mm2
Max Operating Temperature:	+120°C
Min Operating Temperature:	-40°C
Number Of Contacts:	22 Contacts
Rohs Compliant:	Yes
Salt Spray Corrosion Test:	EN60068-2-52 Test Kb Salt Mist (Cyclic) Marine Severity Level 1
Voltage Max:	60V

// Product PDF Links

6000 Series power connectors...

6000 Series metal body power...

// Product 3D CAD Model Links

PXP6011/22S/CR/04053D CAD Model