RFSMAA2PCEB Datasheet

Product Name // SMA Straight Plug 2 Hole Flange RF Connector

View Product Page

* Representative product image only



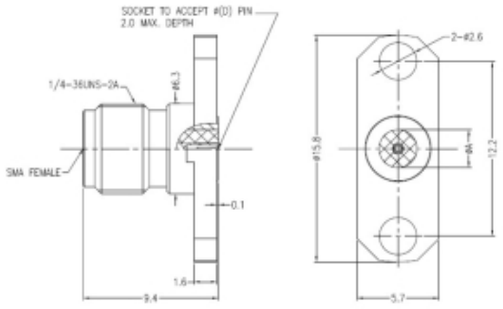

// Product Description:

- SMA Straight Plug 2 Hole Flange RF Connector
- Maximum Voltage: 335V
- Temperature range: -65°C to +165°C
- Frecuency range: 0GHz - 26.5GHz
- VSWR: <1.30
- Dielectric withstanding Voltage: >750V
- Impedance: 50Ohm
- Body Material: Stainless Steel Passivation
- Contact Material: Beryllium Copper

// General Information:

Product Display Title:	SMA Series Socket 2 Hole Flange
Product Family:	Radio Frequency Connectors
Product Series:	SMA Series
Body Length:	12.80mm
Body Material:	Stainless Steel Passivation
Centre Contact Retention Force:	>26.7N
Contact Pin Material:	Beryllium Copper
Min Coupling Torque:	0.80Nm
Max Coupling Torque:	1.10Nm
Coupling Nut Retention Force:	>27.2Kg
Dielectric Withstanding Voltage:	>750V
Durability:	>500 cycles
Flange Mount Length:	12.70mm
Function:	Male Flange Mount RF Connector
Impedance:	50Ohm
Insulation Resistance:	>5000MOhm
Insulator:	Adapter ASTM D 1710
Max Operating Temperature:	+165°C
Min Operating Temperature:	-65°C
Mount Hole Distance:	8.90mm
Min Operating Frequency:	0GHz
Max Operating Frequency:	26.5GHz
Socket Diameter:	0.30mm
Socket Outer Diameter:	1.94mm
Voltage Max:	335V
Vswr:	<1.30

// Product PDF Links

SMA Series Product Datasheet

// Product 3D CAD Model Links

RFSMAA2PCEB3D CAD Model