Passive distribution boxes provide a convenient and compact connectivity solution that can be installed quickly and easily in the field. They offer considerable cost saving benefits when compared to hard-wiring I/O connections due to their pre-wired connector slot configurations which enables numerous sensor and actuator signals to be transmitted back to a control system with ease.

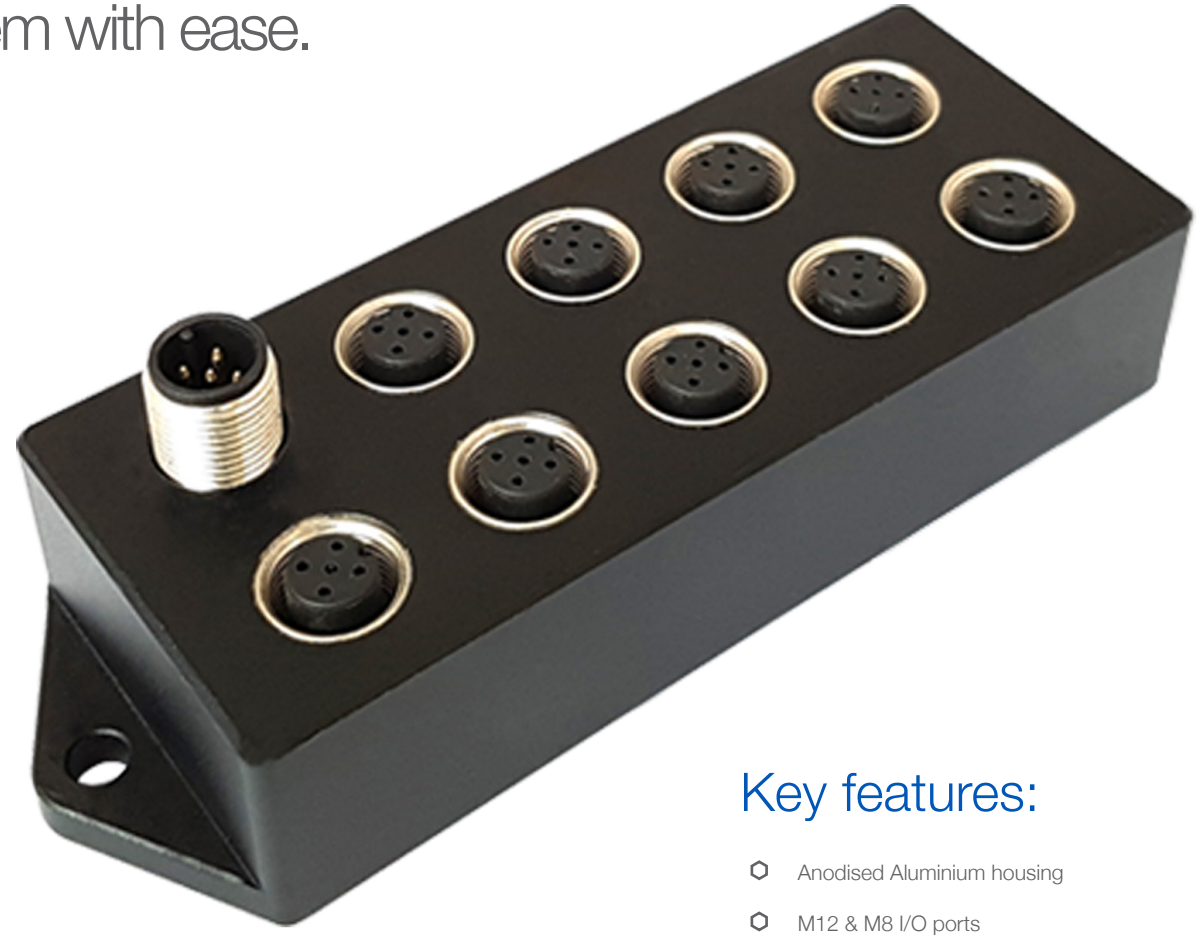

Key features:

- Anodised Aluminium housing
- M12 & M8 I/O ports
- Available with or without LED indicators
- IP67 rated
- 5, 8, and 9 port configurations
- Operating Temp Range -25°C to 80°C

Bulgin's passive distribution boxes feature industry standard M12 and M8 I/O connection ports. With a compact design and robust aluminium housing that is IP67 sealed and fully potted; these distribution units offer high performance and protection against elements such as moisture, liquids and dirt in environmentally challenging applications.

The Benefits:

Save Time

With the need to hard wire I/O connections removed and variants coming equipped with identification labels and integrated LEDs, Bulgin's distribution boxes help to save on costs associated with installation, maintenance and repair time by making it easy and quick to troubleshoot connection faults.

Save Space

Distribution boxes save space in the field as they require less space than more conventional distribution systems due to their compact design. They take up far less space than loose wires and require fewer terminal blocks/boxes, making them the ideal solution for many machine requirements or automation systems.

Save Money

By simplifying the wiring control system and eliminating the need for additional enclosures, distributor boxes can be installed quickly which saves time and costs. Their ability to reduce troubleshooting time also means that downtime can be significantly minimised in manufacturing, food-processing and industrial automation applications.

M-Series - Distribution Units

BOX1M1205MA05M1205F

- 5 outputs
- Sealed using sealing caps
- Anodised aluminium body
- Mates with Flex Body and Inline Connectors

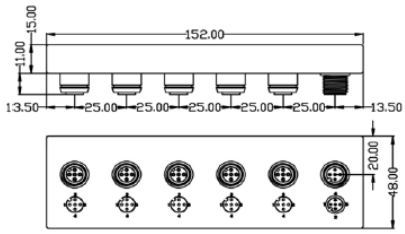

Part Number	Input Type	Input Contact Count	Output Ports	Output Type	Output Contact Count
BOX1M1205MA05M1205F	M12	5 Contacts	5 Ports	M12	5 Contacts

BOX1M1212MA08M803F

- 8 outputs
- Sealed using sealing caps
- Anodised aluminium body
- Mates with Flex Body and Inline Connectors

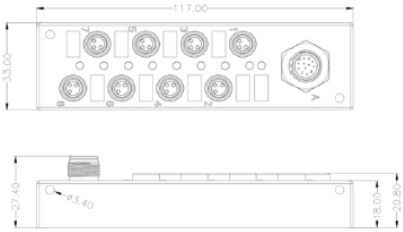

Part Number	Input Type	Input Contact Count	Output Ports	Output Type	Output Contact Count
BOX1M1212MA08M803F	M12	12 Contacts	8 Ports	M8	3 Contacts

BOX1M1205MA09M1205F

- 9 outputs
- Sealed using sealing caps
- Anodised aluminium body
- Mates with Flex Body and Inline Connectors

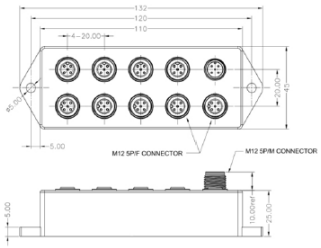

Part Number	Input Type	Input Contact Count	Output Ports	Output Type	Output Contact Count
BOX1M1205MA09M1205F	M12	5 Contacts	9 Ports	M12	5 Contacts

Specifications:

Locking mechanism:	Screw coupling
Sealing:	IP67
Operating Temp Range:	-25°C to 80°C

Box & Panel Mount:

Body Material:	Anodised Aluminium
Colour:	Black
Plug Contacts Material:	Brass, Gold plating
Socket Contacts Material:	Phosphor Bronze, Gold plating
RoHS:	Compliant

Wiring diagram for BOX1M1212MA08M803F

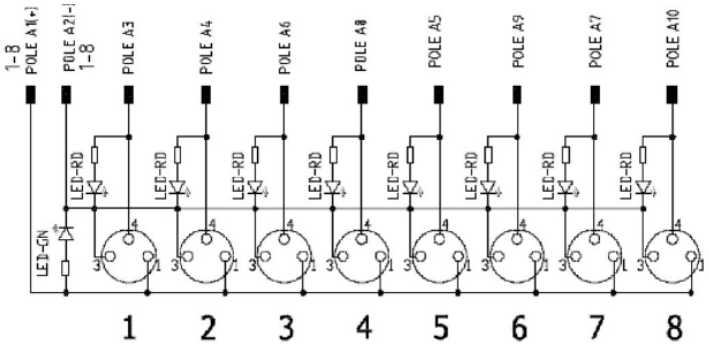

BOX	X	XX	XX	X	X	XX	XX	XX	X
Series	**Inputs**	**Input Series**	**Input Contacts**	**Orientation**	**Code**	**Outputs**	**Output Series**	**Output Contacts**	**Orientation**
Box	1	M12	05 12	M	A	05 08 09	M8 M12	03 05	F = Female